Technical Data

Specification & Capacities

MPK50

12,0kW/16,1Hp

9’02’’- 22’08’’

11000 lb

B30.5

Via Campardone, 1
31014 Colle Umberto – Italy
Tel. +39 0438 1710083
Mail: info@jekko.it
Web: www.jekko.it

Date	Oct. 11th 2016
REV.	Rev. 5

MPK50 – OVERALL DIMENSIONS

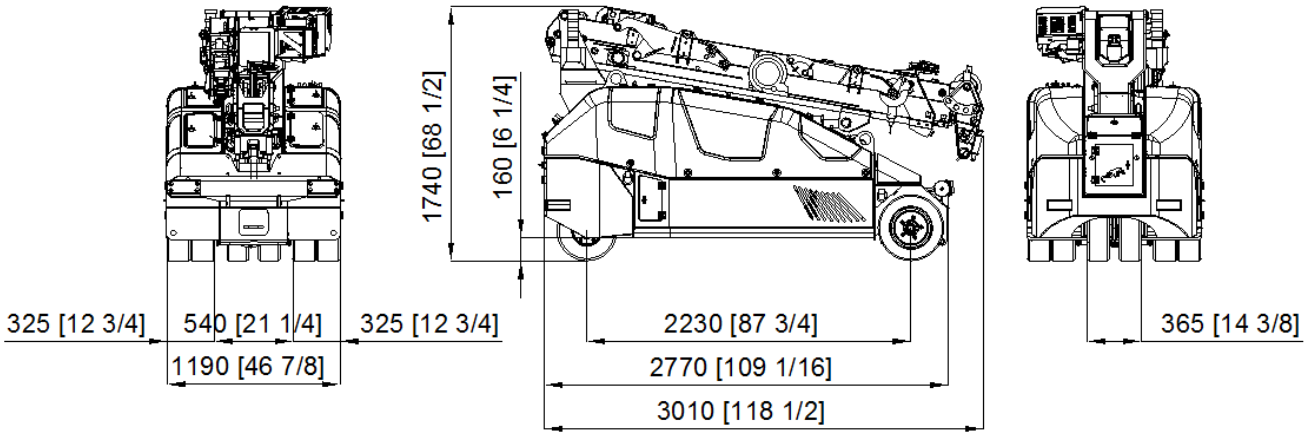

MPK50 - Stabilizing bar

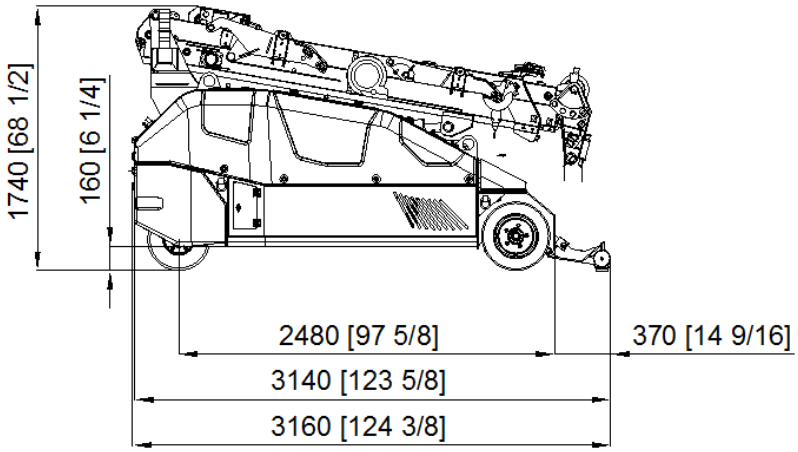

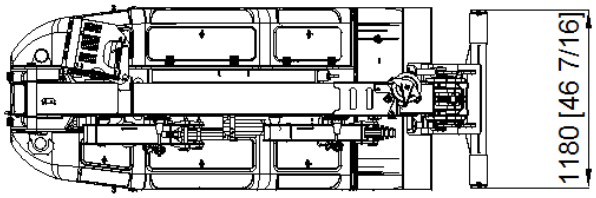

MPK50 – Boom movement

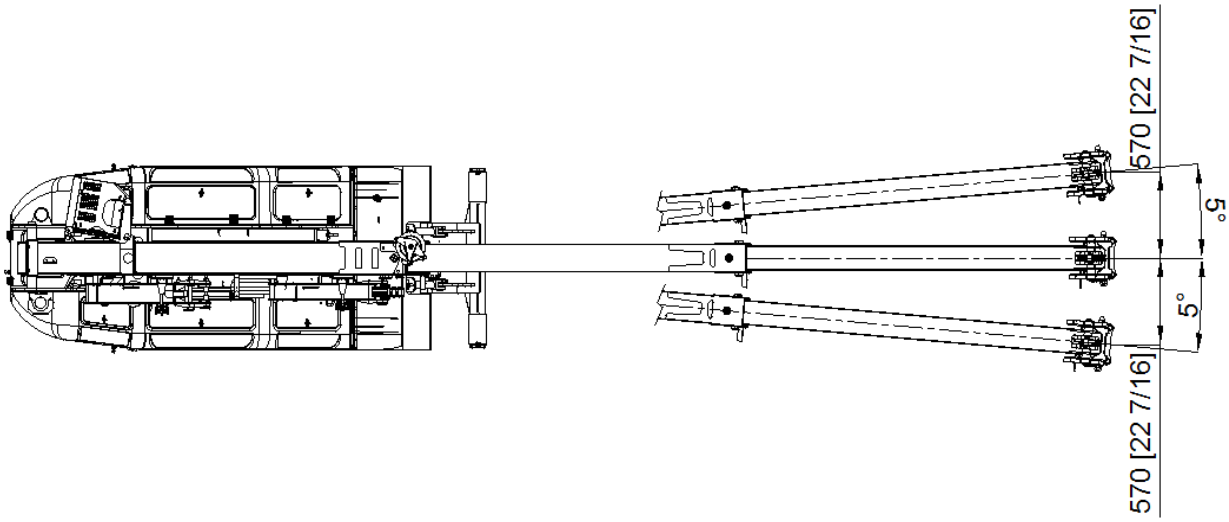

MPK50 – Turning radius

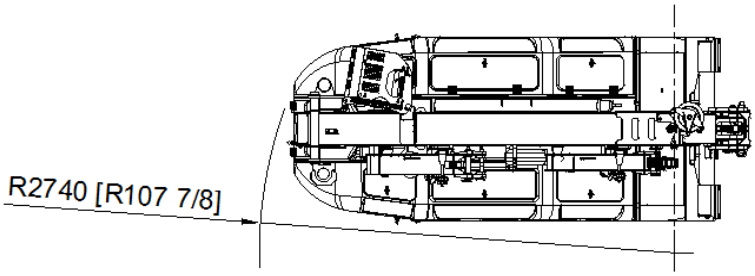

		lb
		7590
		2200
	Tot.	**9790**

	48V 620 Ah	kW	12,0kW 16,1Hp

	mph	6,4
	20%	

	-10°/65°		25 sec
	ft	9'2"- 22'8"	25 sec

Reaction on wheel (double wheel base)

KG	lb	0
	lb	5720
	lb	4070
TOTAL	lb	9790

HOIST PERFORMANCE

Layer	Max Line Pull	Normal Line Speed	High Line Speed
	lb	ft/min	ft/min
1	3.280 (*)	112,9	N/A
2	3.029 (*)	123,0	N/A
3	2.818 (*)	133,2	N/A
4	2578 (*)	140,4	N/A
5	2.420(*)	148,0	N/A

(*) 2200lb LMI limited

Wire Rope	Diameter	Tot. Length	Max Load
	in	ft	lb
19x7 right lang lay Non rotating	5/16''	196' 10''	11.957

HOOK BLOCK

LOAD	No. of	
lb	Sheaves	Lines
11.000	3	5
8.800	2	4
6.600	2	3
4.400	1	2
2.200		1

BOOM HEAD CONFIGURATIONS

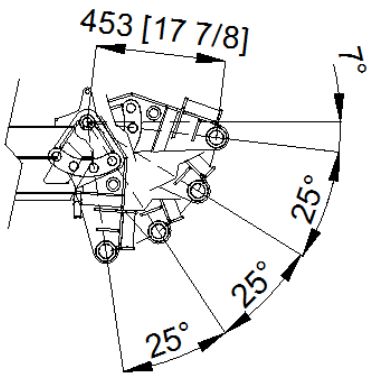

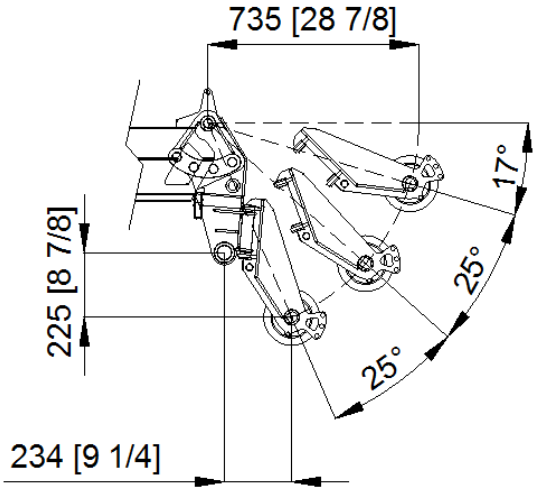

MPK50 MAIN BOOM
Wheels

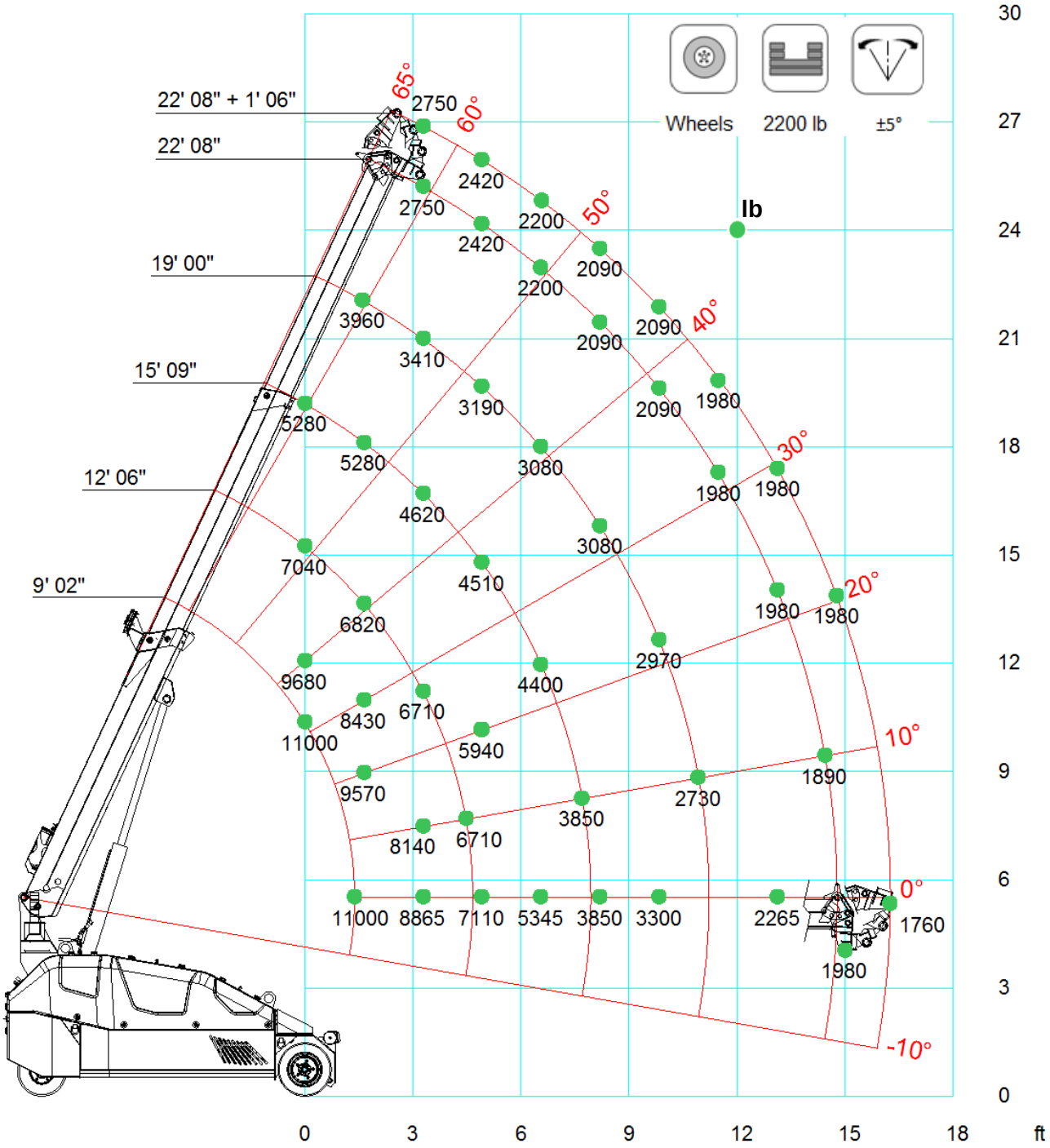

	HOOK	Wheels	2200 lb	±5°	
	9' 02"	12' 06"	15' 09"	19' 00"	22' 08"
0' 00"	11000	7040	5280		
1' 08"	11000	6820	5280	3960	
3' 03"		6710	4620	3410	2750
4' 11"		6710	4510	3190	2420
6' 07"			4400	3080	2200
8' 02"			3850	3080	2090
9' 10"				2970	2090
11' 06"				2640	1980
13' 01"					1980
14' 09"					1980
16' 01"					1760

LCMPK50_V101_0416_MAIN_A1_G_CW_1000_WHEEL

	HOOK	Wheels	0 lb	±5°	
	9' 02"	12' 06"	15' 09"	19' 00"	22' 08"
0' 00"	9900	5940	4510		
1' 08"	8800	5500	4180	3080	
3' 03"		4840	3520	2860	2585
4' 11"		3740	3080	2640	2255
6' 07"			2640	2420	2145
8' 02"			1980	1870	1870
9' 10"				1672	1540
11' 06"				1364	1320
13' 01"					1100
16' 01"					990

LCMPK50_V102_0616_MAIN_A1_G_CW_0_WHEEL

MPK50 MAIN BOOM
Stabilizing bar

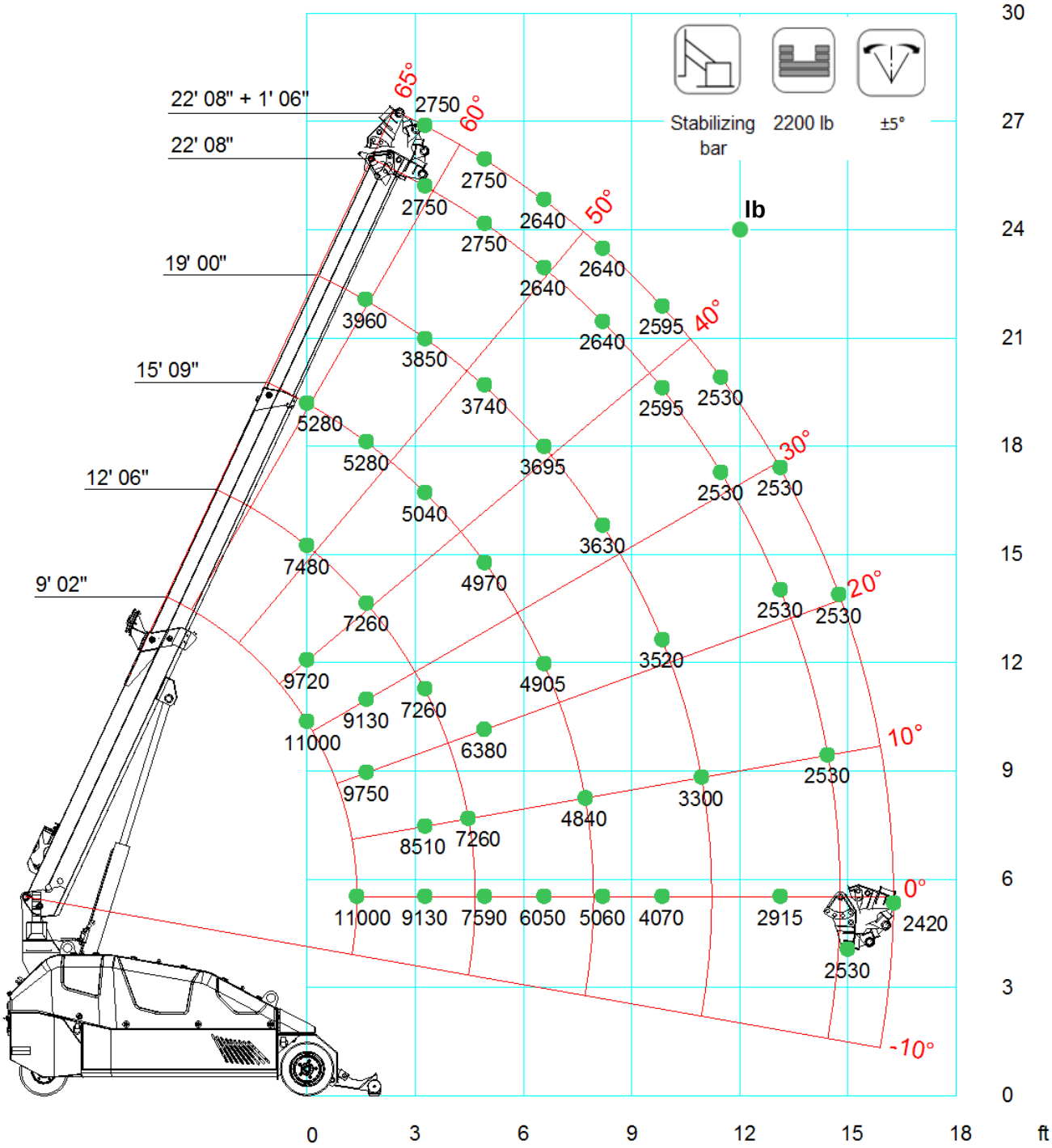

	HOOK	Stabilizing bar	2200 lb	±5°	
	9' 02"	12' 06"	15' 09"	19' 00"	22' 08"
0' 00"	11000	7480	5280		
1' 08"	11000	7260	5280	3960	
3' 03"		7260	5038	3850	2750
4' 11"		7260	4972	3740	2750
6' 07"			4906	3696	2640
8' 02"			4840	3630	2640
9' 10"				3520	2596
11' 06"				3300	2530
13' 01"					2530
14' 09"					2530
16' 01"					2420

LCMPK50_V101_0416_MAIN_A1_G_CW_1000_BAR

	HOOK	Stabilizing bar	0 lb	±5°	
	9' 02"	12' 06"	15' 09"	19' 00"	22' 08"
0' 00"	11000	6600	4884		
1' 08"	9900	6380	4730	3520	
3' 03"		6050	4290	3300	2618
4' 11"		5500	4026	3190	2530
6' 07"			3740	3036	2453
8' 02"			3410	2750	2310
9' 10"				2596	2145
11' 06"				2310	1980
13' 01"					1870
16' 01"					1760

LCMPK50_V102_0616_MAIN_A1_G_CW_0_BAR

MPK50 MAIN BOOM Winch Wheels

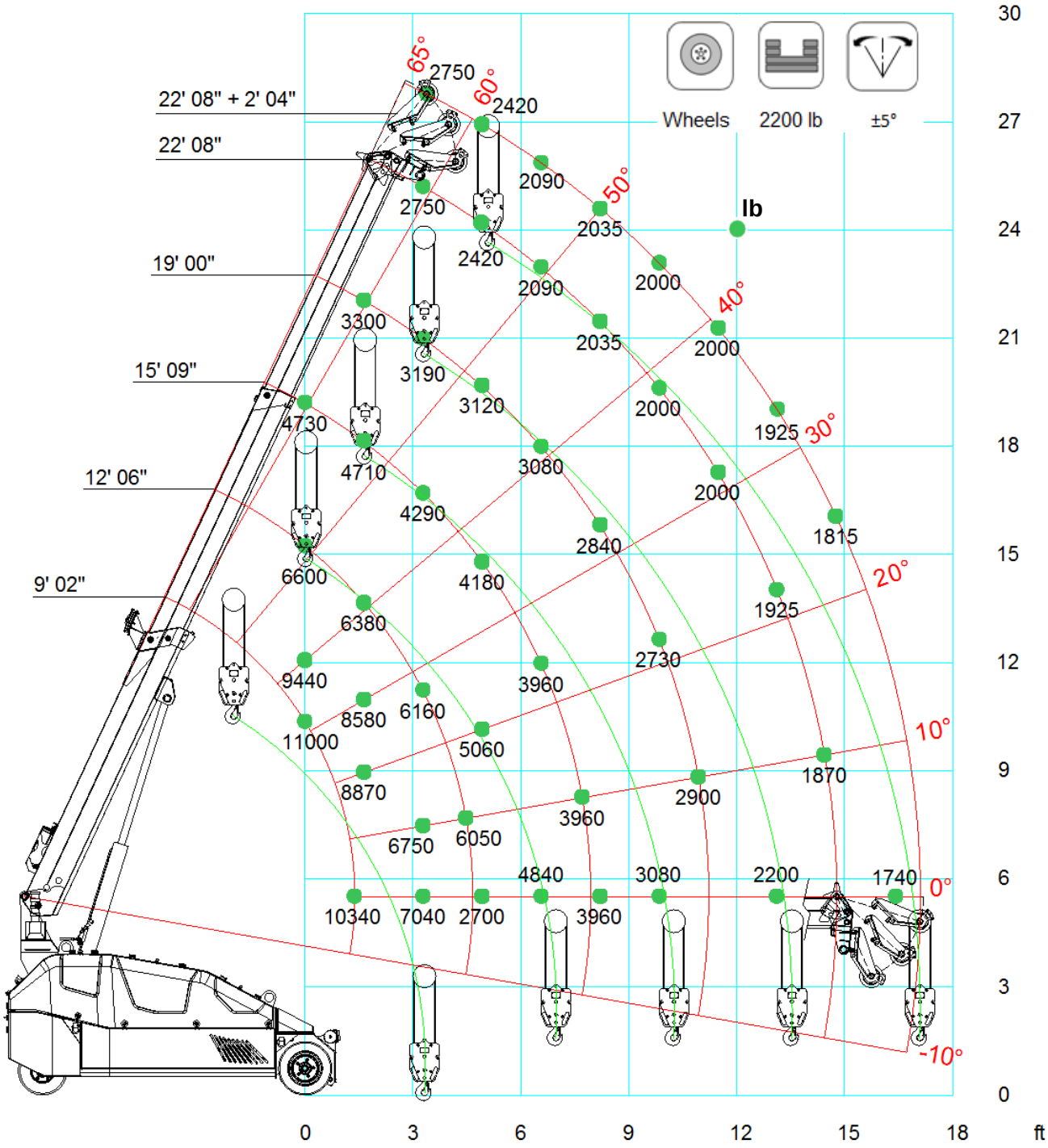

	WINCH	Wheels	2200 lb	±5°	
	9' 02"	12' 06"	15' 09"	19' 00"	22' 08"
0' 00"	11000	6556	4708		
1' 08"	10340	6380	4708	3300	
3' 03"		6204	4268	3168	2750
4' 11"		6116	4180	3124	2442
6' 07"			3960	3080	2090
8' 02"			3542	2838	2035
9' 10"				2728	2002
11' 06"				2552	2002
13' 01"					1925
14' 09"					1815
16' 01"					1760

LCMPK50_V101_0416_MAIN_A1_G_CW_1000_WHEEL

	WINCH	Wheels	0 lb	±5°	
	9' 02"	12' 06"	15' 09"	19' 00"	22' 08"
0' 00"	9900	5588	3916		
1' 08"	7700	5148	3916	3168	
3' 03"		4576	3520	2948	2255
4' 11"		3652	3212	2728	2035
6' 07"			2552	2112	1705
8' 02"			1936	1826	1562
9' 10"				1496	1232
11' 06"				1276	1100
13' 01"					1001
14' 09"					935
16' 01"					880

LCMPK50_V102_0616_MAIN_A1_F_CW_0_WHEEL

MPK50 MAIN BOOM Winch
Stabilizing bar

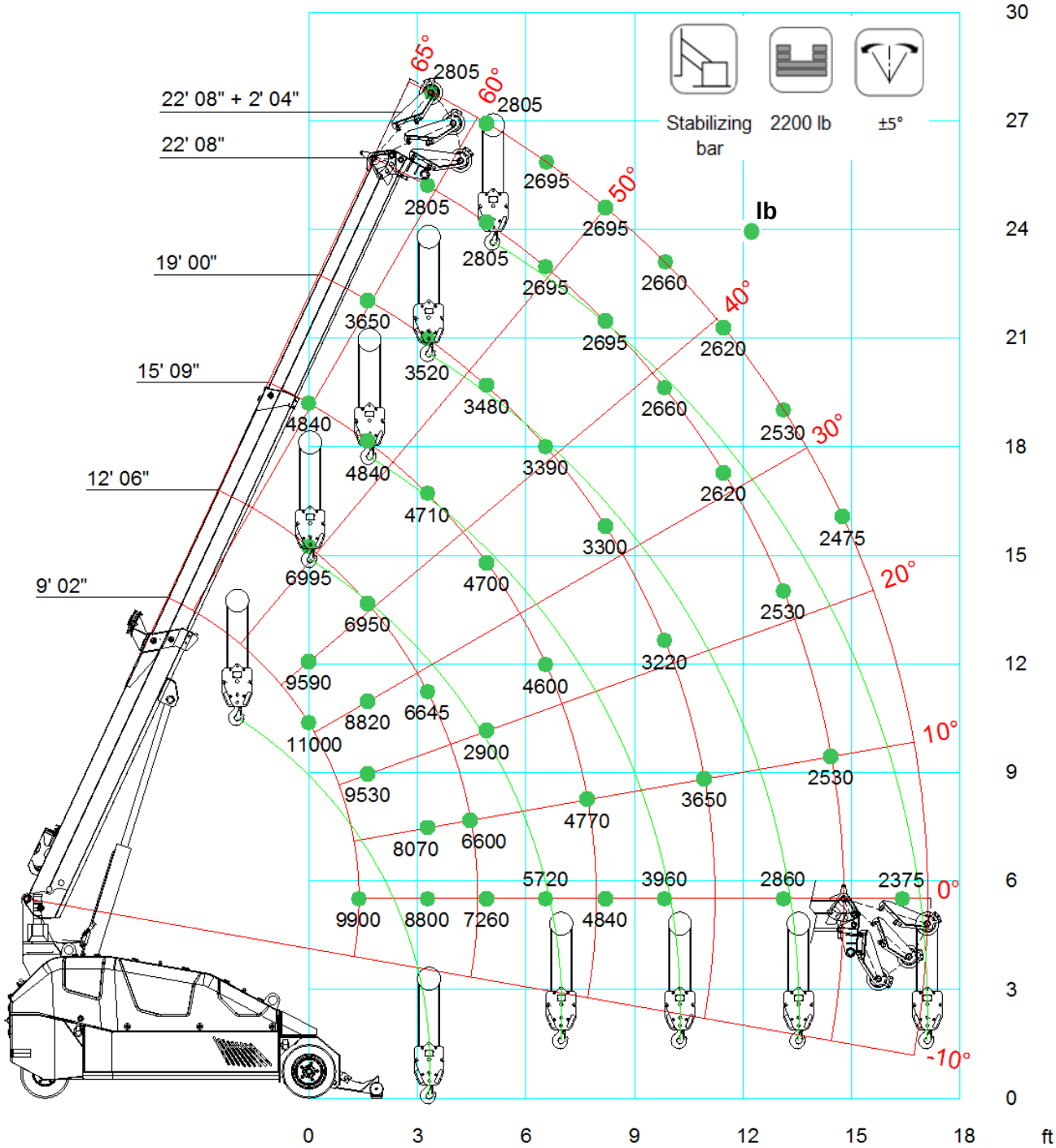

	WINCH	Stabilizing bar	2200 lb	±5°	
	9' 02"	12' 06"	15' 09"	19' 00"	22' 08"
0' 00"	11000	6996	4840		
1' 08"	9900	6952	4840	3652	
3' 03"		6644	4708	3520	2805
4' 11"		6644	4697	3476	2805
6' 07"			4598	3388	2695
8' 02"			4488	3300	2695
9' 10"				3223	2662
11' 06"				3146	2618
13' 01"					2530
14' 09"					2475
16' 01"					2420

LCMPK50_V101_0416_MAIN_A1_G_CW_1000_BAR

	WINCH	Stabilizing bar	0 lb	±5°	
	9' 02"	12' 06"	15' 09"	19' 00"	22' 08"
0' 00"	10450	6292	4378		
1' 08"	8800	5984	4378	3608	
3' 03"		5610	4114	3234	2750
4' 11"		5148	3949	3080	2365
6' 07"			3520	2717	2222
8' 02"			3190	2530	2112
9' 10"				2332	1947
11' 06"				2200	1815
13' 01"					1760
14' 09"					1705
16' 01"					1650

LCMPK50_V102_0616_MAIN_A1_F_CW_0_BAR

MPK50 JIB1800-700.2M Short Wheels

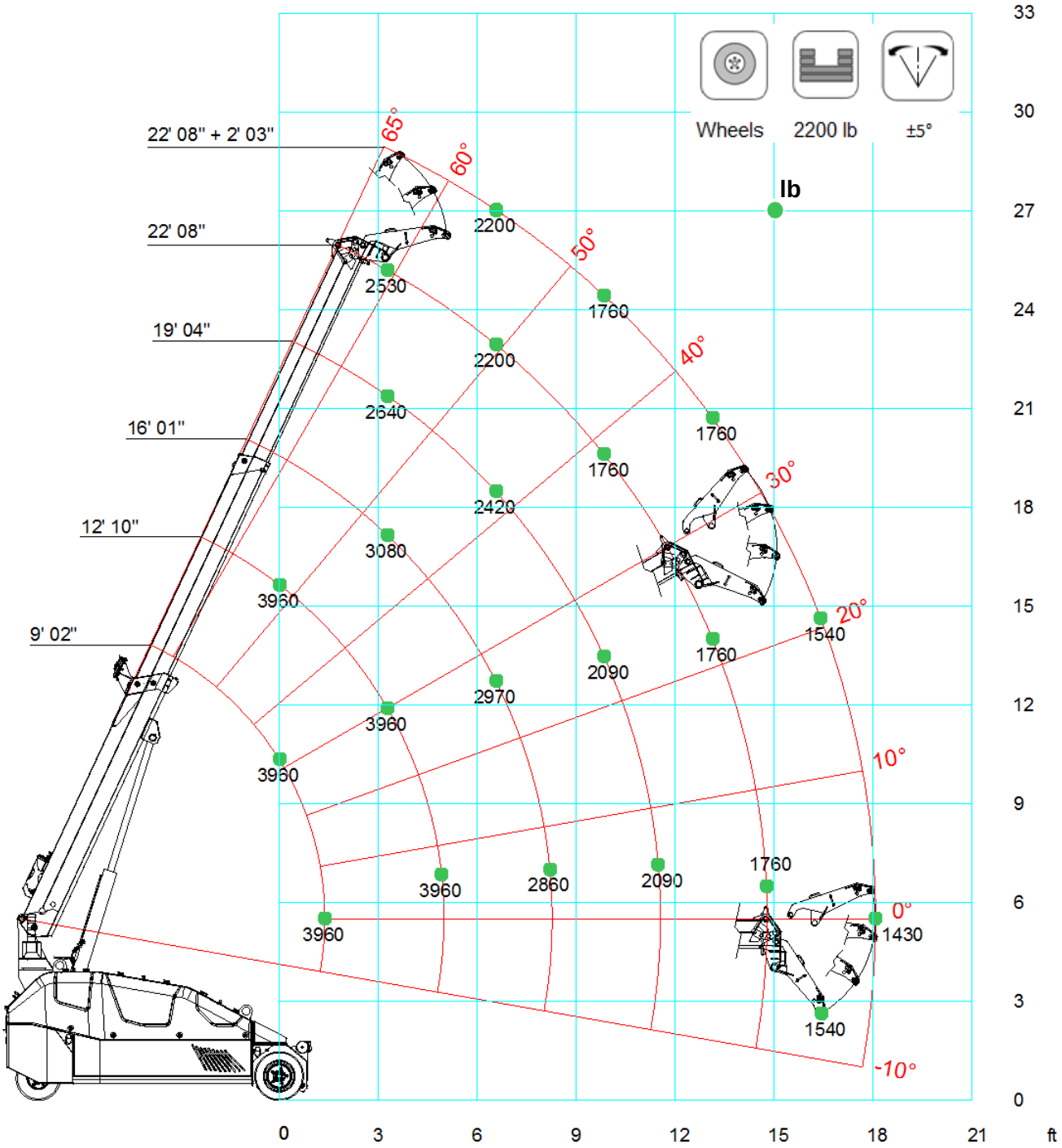

	SHORT	Wheels	2200 lb	±5°	
	9' 02"	12' 10"	16' 01"	19' 04"	22' 08"
0' 00"	3960	3960			
1' 08"	3960	3960	3080	2640	
3' 03"	3960	3960	3080	2640	2530
4' 11"		3960	3080	2530	2420
6' 07"		3960	2970	2420	2200
8' 02"		3960	2860	2200	1870
9' 10"			2750	2090	1760
11' 06"			2706	2090	1760
13' 01"				1980	1760
14' 09"				1980	1760
16' 05"					1540
18' 01"					1430

LCMPK50_V101_0416_JIB1800_A1_G_CW_1000_WHEEL

	SHORT	Wheels	0 lb	±5°	
	9' 02"	12' 10"	16' 01"	19' 04"	22' 08"
0' 00"	3960	3300			
1' 08"	3960	3300	2640	1980	
3' 03"	3960	3080	2640	1980	1540
4' 11"		2860	2420	1760	1540
6' 07"		2420	2090	1760	1320
8' 02"		2090	1760	1540	1210
9' 10"			1540	1320	1100
11' 06"			1320	1210	990
13' 01"				1100	924
14' 09"				880	880
16' 05"					836
18' 01"					660

LCMPK50_V101_0416_JIB1800_A1_G_CW_0_WHEEL

MPK50 JIB1800-700.2M Short Stabilizing bar

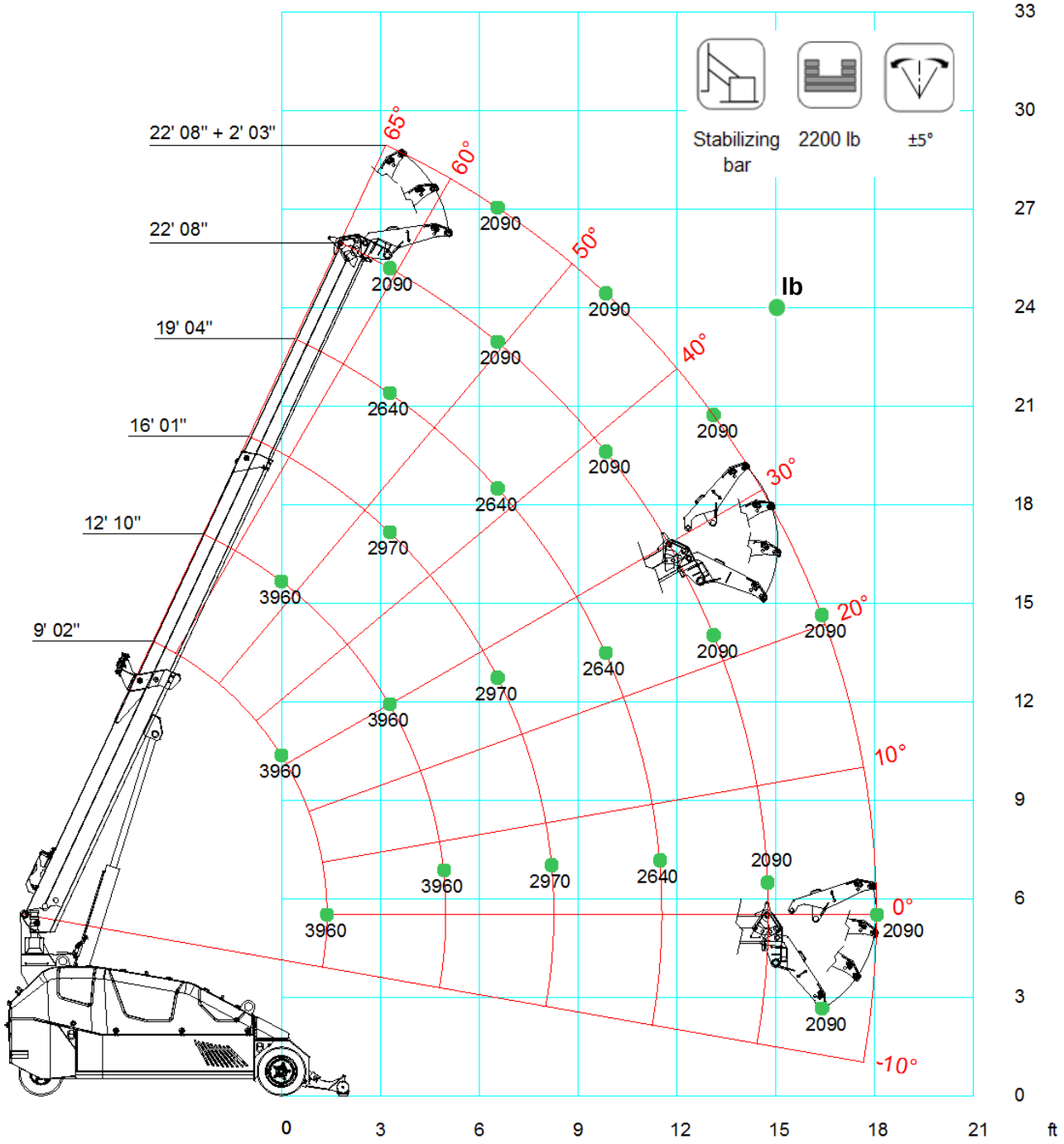

	SHORT	Stabilizing bar	2200 lb	±5°	
	9' 02"	12' 10"	16' 01"	19' 04"	22' 08"
0' 00"	3960	3960			
1' 08"	3960	3960	2970	2640	
3' 03"	3960	3960	2970	2640	2090
4' 11"		3960	2970	2640	2090
6' 07"		3960	2970	2640	2090
8' 02"		3960	2970	2640	2090
9' 10"			2970	2640	2090
11' 06"			2970	2640	2090
13' 01"				2640	2090
14' 09"				2640	2090
16' 05"					2090
18' 01"					2090

LCMPK50_V101_0416_JIB1800_A1_G_CW_2000_BAR

	SHORT	Stabilizing bar	0 lb	±5°	
	9' 02"	12' 10"	16' 01"	19' 04"	22' 08"
0' 00"	3960	3630			
1' 08"	3960	3630	2805	2310	
3' 03"	3960	3520	2805	2310	1815
4' 11"		3410	2695	2200	1815
6' 07"		3190	2530	2200	1705
8' 02"		3080	2365	2090	1650
9' 10"			2255	1980	1595
11' 06"			2090	1925	1540
13' 01"				1870	1507
14' 09"				1760	1430
16' 05"					1320
18' 01"					1210

LCMPK50_V101_0416_JIB1800_A1_G_CW_0_BAR

MPK50 JIB1800-700.2M Long Wheels

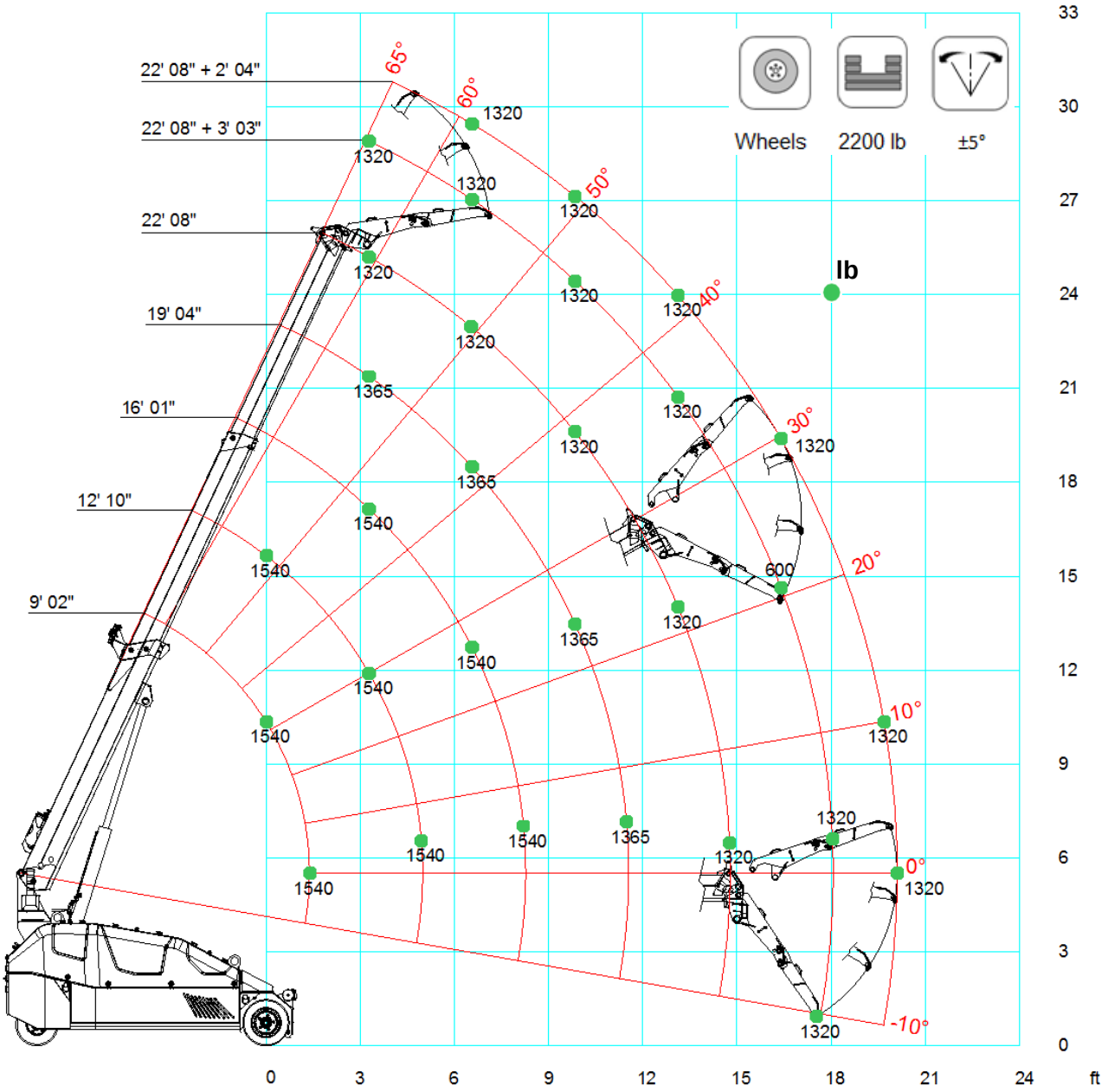

	LONG	Wheels	2200 lb	±5°	
	9' 02"	12' 10"	16' 01"	19' 04"	22' 08"
0' 00"	1540				
1' 08"	1540	1540			
3' 03"	1540	1540	1540		
4' 11"	1540	1540	1540	1364	1320
6' 07"	1540	1540	1540	1364	1320
8' 02"		1540	1540	1364	1320
9' 10"		1540	1540	1364	1320
11' 06"			1540	1364	1320
13' 01"			1430	1364	1320
14' 09"				1364	1320
16' 05"				1364	1320
18' 01"					1320
20' 00"					1320

LCMPK50_V101_0416_JIB700_A1_G_CW_1000_WHEEL

	LONG	Wheels	0 lb	±5°	
	9' 02"	12' 10"	16' 01"	19' 04"	22' 08"
0' 00"	1540				
1' 08"	1540	1540			
3' 03"	1540	1540	1540		
4' 11"		1540	1540	1320	1100
6' 07"		1540	1540	1320	1100
8' 02"		1540	1540	1100	990
9' 10"		1540	1540	1100	990
11' 06"			1320	1100	990
13' 01"			1100	1100	880
14' 09"				880	880
16' 05"				770	770
18' 01"					660
20' 00"					440

LCMPK50_V101_0416_JIB700_A1_G_CW_0_WHEEL

MPK50 JIB1800-700.2M Long Stabilizing bar

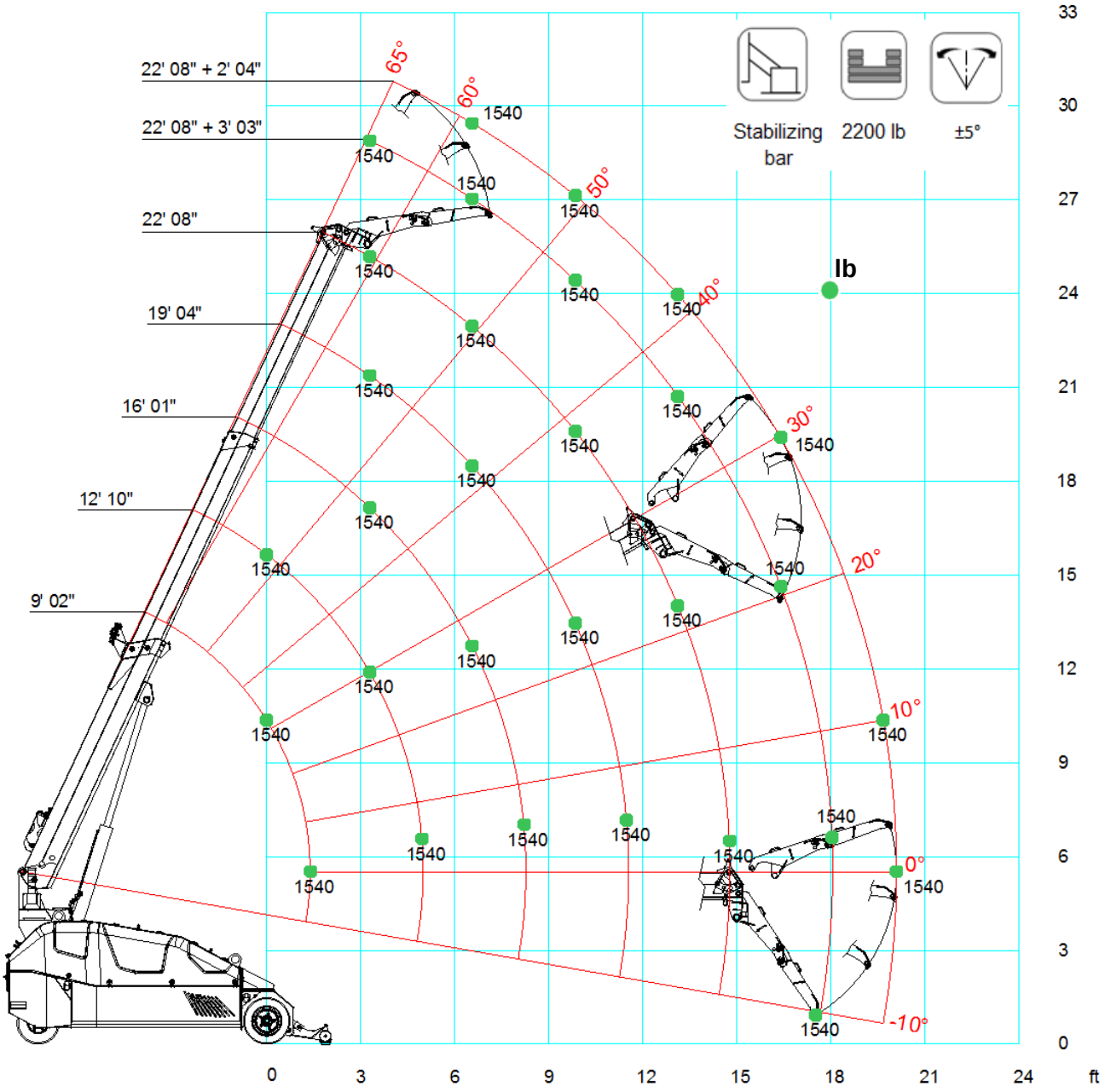

	LONG	Stabilizing bar	2200 lb	±5°	
	9' 02"	12' 10"	16' 01"	19' 04"	22' 08"
0' 00"	1540				
1' 08"	1540	1540			
3' 03"	1540	1540	1540		
4' 11"	1540	1540	1540	1540	1540
6' 07"	1540	1540	1540	1540	1540
8' 02"		1540	1540	1540	1540
9' 10"		1540	1540	1540	1540
11' 06"			1540	1540	1540
13' 01"			1540	1540	1540
14' 09"				1540	1540
16' 05"				1540	1540
18' 01"					1540
20' 00"					1540

LCMPK50_V101_0416_JIB700_A1_G_CW_1000_BAR

	LONG	Stabilizing bar	0 lb	±5°	
	9' 02"	12' 10"	16' 01"	19' 04"	22' 08"
0' 00"	1540				
1' 08"	1540	1540			
3' 03"	1540	1540	1540		
4' 11"		1540	1540	1320	1100
6' 07"		1540	1540	1320	1100
8' 02"		1540	1540	1320	1100
9' 10"		1540	1540	1210	1100
11' 06"			1540	1210	1100
13' 01"			1430	1210	1100
14' 09"				1210	1100
16' 05"				1100	1100
18' 01"					1100
20' 00"					990

LCMPK50_V101_0416_JIB700_A1_G_CW_0_BAR

ACCESSORIES

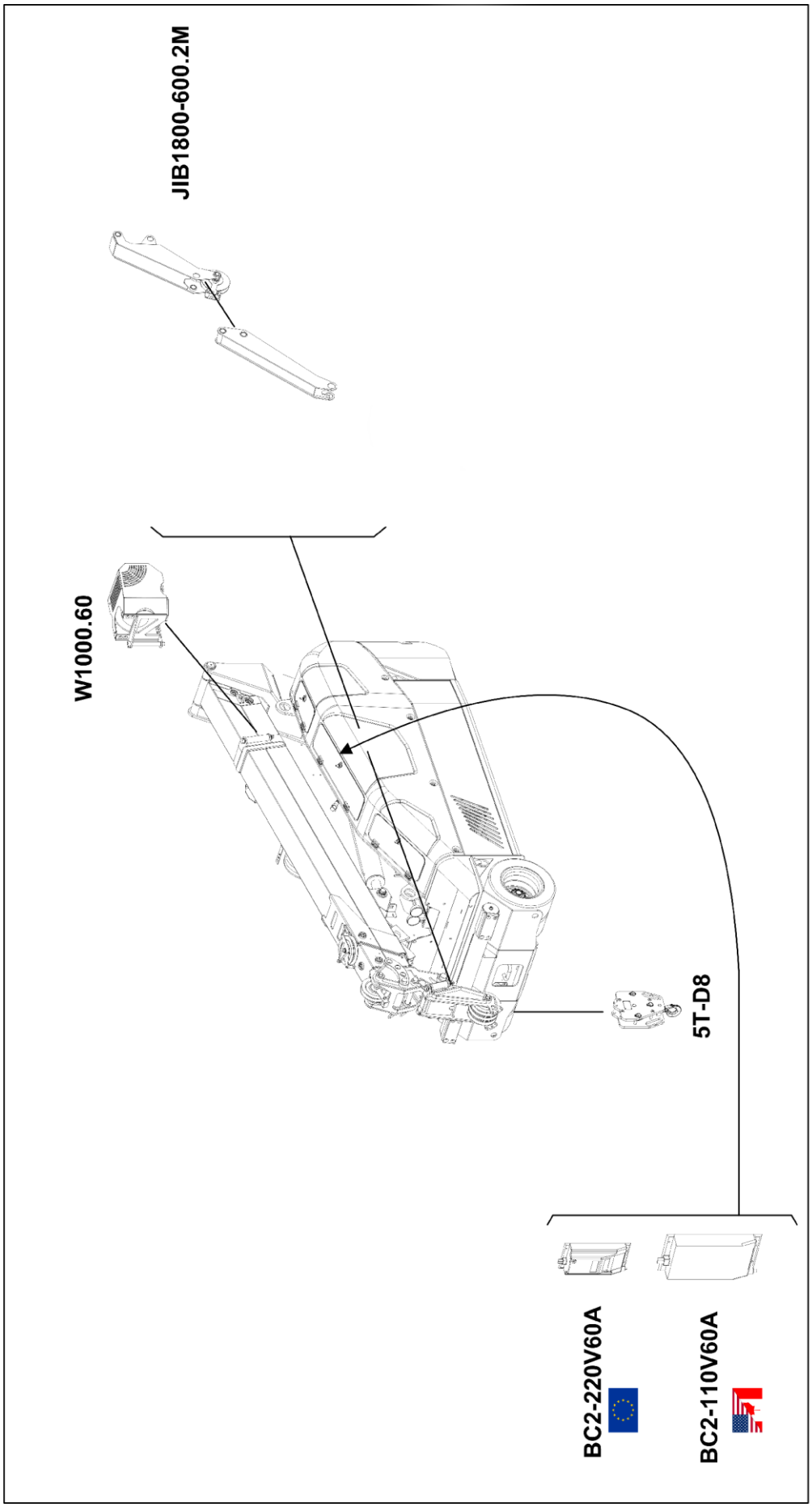

	STD	PC-01	PC-11
Boom, Covers & Outriggers	RAL2004	RAL____	RAL____
Chassis, Frames & Tanks	RAL7001	RAL7001	RAL____

ACCESSORIES FEATURES

JIB1800-700.2M
Short configuration

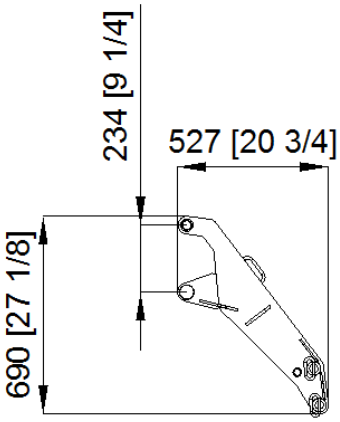

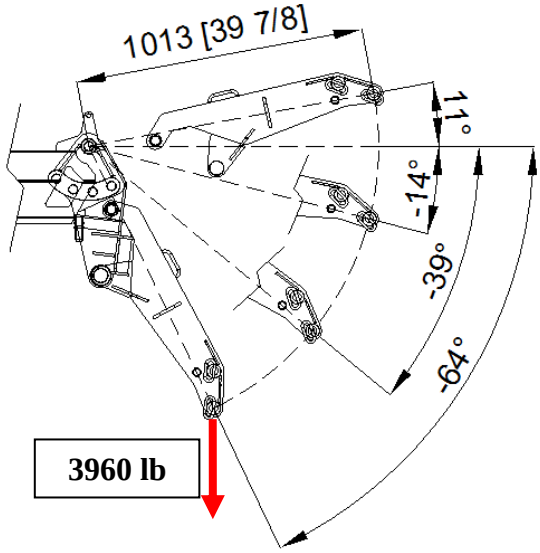

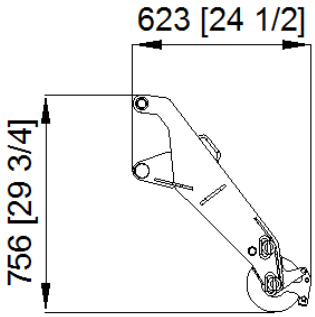

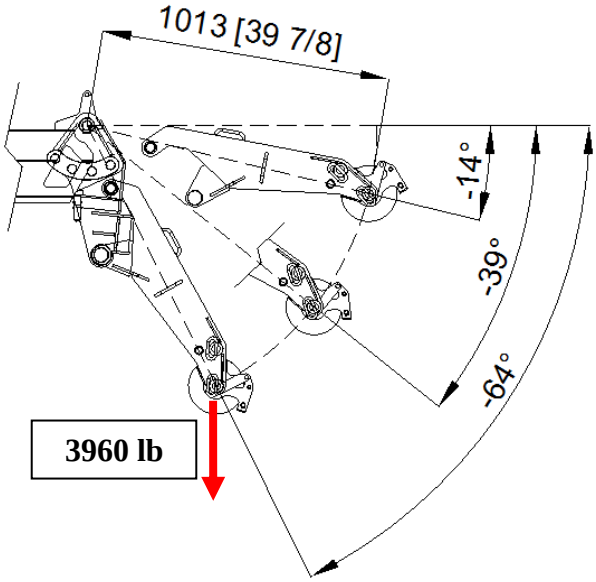

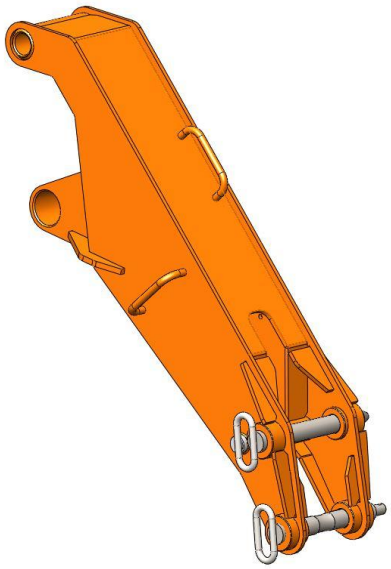

	lb
	66

JIB1800-700.2M
Long configuration

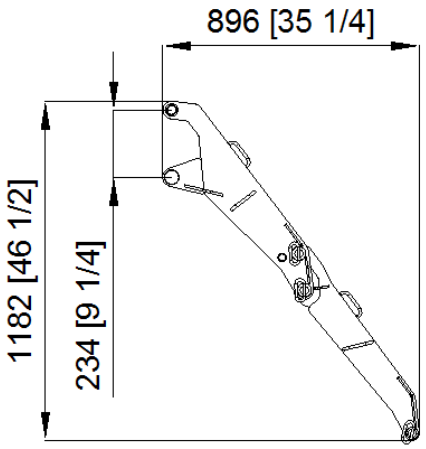

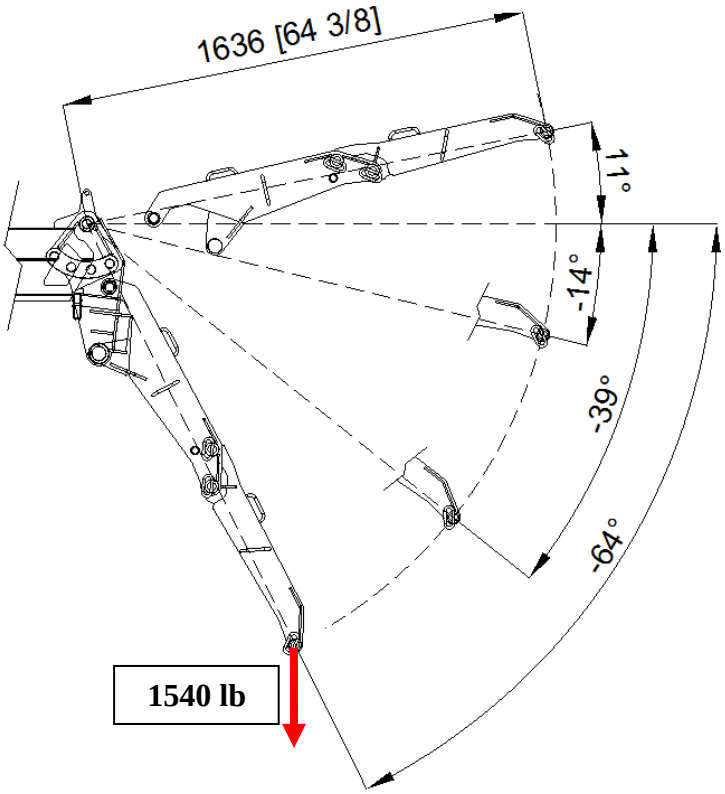

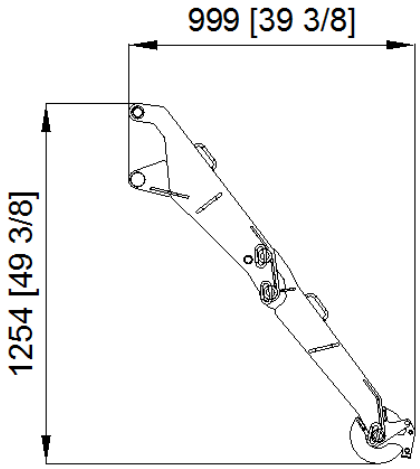

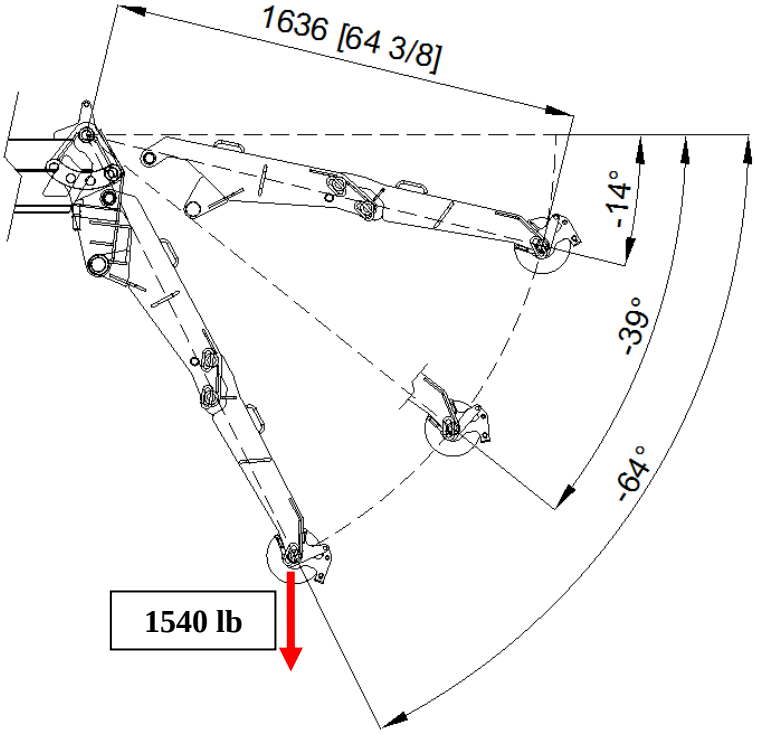

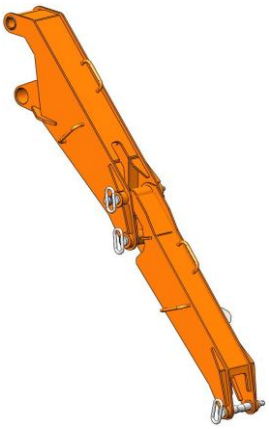

	lb
	66+44

SYMBOLS

Weight	Chart Wheels	Engine	Jib lenght and angle
Counterweight	Minipicker	Diesel Fuel	Jib Lenght
Crane	Back Wheel Point Loading	Gasoline Fuel	Jib Radius
Travel Speed	Front wheel Point Loading	Tank	Hydraulic Jib Lenght
Gradeability	Travel Speed	Battery	Hydraulic Jib Radius
Outtrigger Load	Gradeability	Power	Mechanical Jib Lenght
Track Loading	Working Radius	Boom Angle	Mechanical Jib Radius
Outtriggers Setup	Hookblock	Boom Lenght	Manipulator Lenght
Ext Tracks Width	Slewing	Boom Radius	Manipulator Radius
Chart On Tracks	Slewing Locked	Jib Hook Radius	Maximum inclination of the machinery
Jib on board	Without jib on board	Stabilizing bar	Horizontal boom angle
Number of vacuum pads	Factory max. load	Building site max. load	

Remarks referring to load chart

- For the calculation of the load charts at least a wind speed of 30 ft/s (20 mph) and regarding the load a sail area of 1m² (1,2 yd²) per metric ton (2205 lb) load and a wind resistance coefficient of 1.2 on the load have been taken into account. For lifting of loads with large sail areas and/or high wind resistance coefficients the maximum wind speed as stated in the load charts has to be reduced.
- Lifting capacities are given in pounds.
- The weight of the hook blocks and hooks is part of the load and therefore it must be deducted from the lifting capacities.
- Working radii are mesured from the slewing centre.
- The lifting capacities given for the telescopic boom apply if the folding jib is removed.
- Subject to modification of lifting capacities.

NOTES

NOTES

NOTES

NOTES

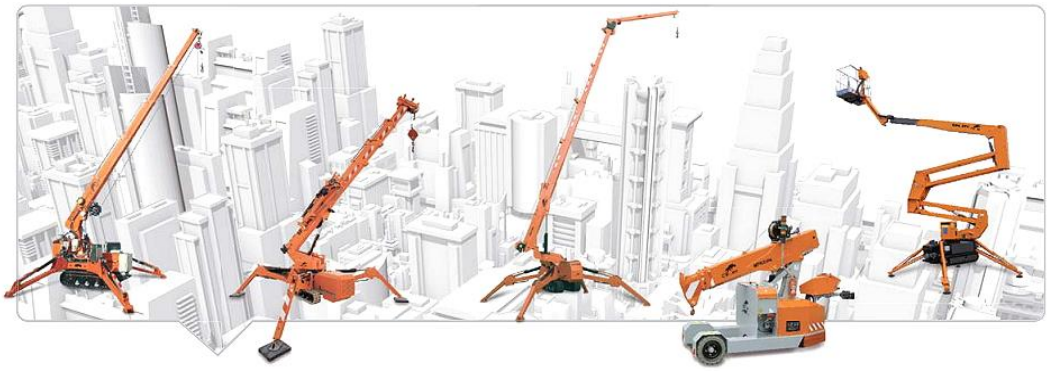

DEALER

JEKKO S.r.l. via Campardone, 1 Z.I. 31014 Colle Umberto (TV)
Italy tel. +39 0438 1710083 fax +39 0438 1710123
www.jekko.it - info@jekko.it